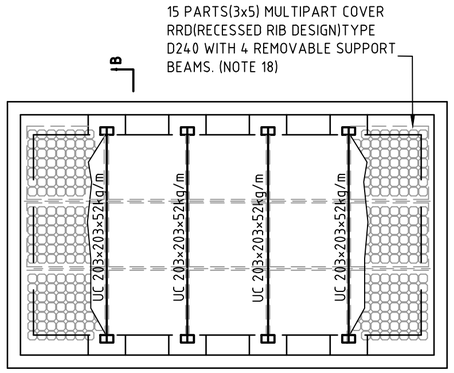

ROOF OF THE CABLE PIT

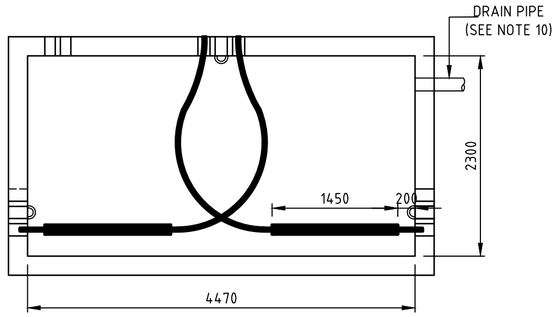

CABLE LAYOUT

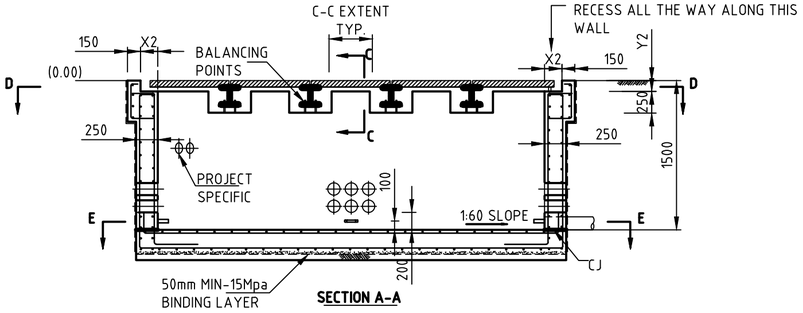

SECTION A-A

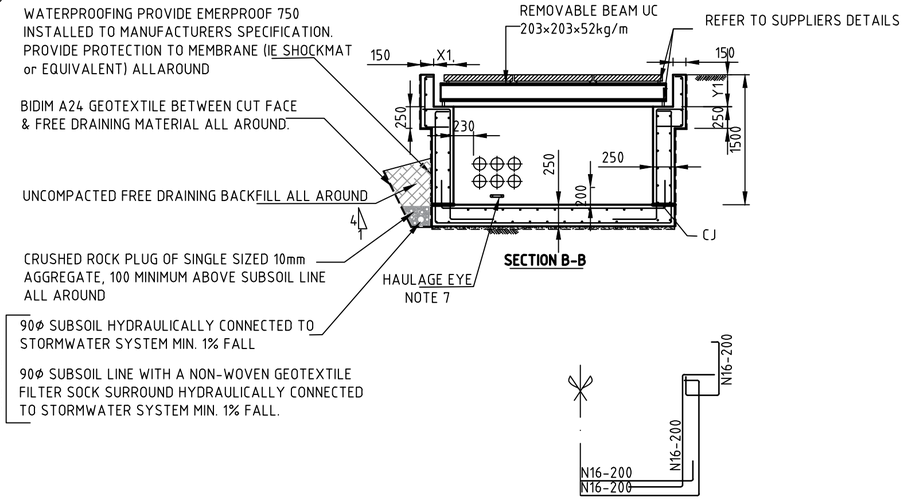

SECTION B-B

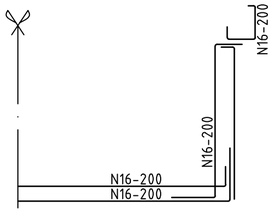

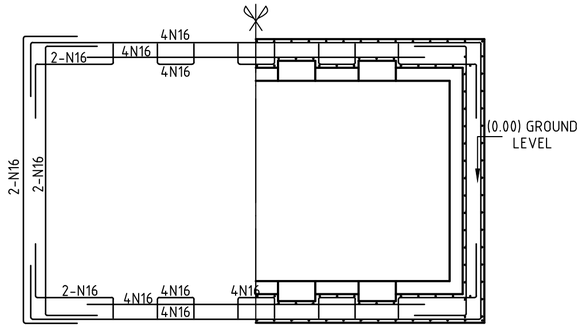

SECTION D-D

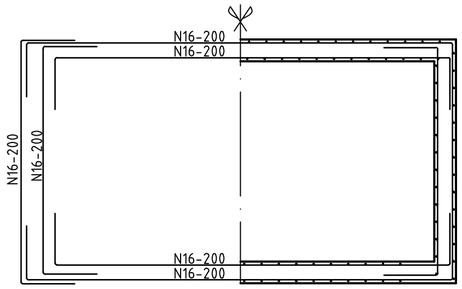

SECTION E-E

NOTES:

1. CONCRETE SHALL BE STANDARD STRENGTH GRADE 40 MPa COMPLYING WITH AS3600.
2. CLEAR CONCRETE COVER TO REINFORCEMENT SHALL BE 40mm.
3. ALL EXPOSED INTERNAL AND EXTERNAL CORNERS SHALL BE PROVIDED WITH A 20mm FILLET OR CHAMFER UNLESS NOTED OTHERWISE.
4. FORMWORK AND CONCRETE SURFACE FINISHES SHALL BE CLASS 3, EXCEPT FOR SURFACES AGAINST BACKFILL WHICH SHALL BE CLASS 5, BOTH IN ACCORDANCE WITH AS3610.
5. REINFORCING BARS SHALL BE GRADE 500N DEFORMED BARS TO AS1302 AND MESH SHALL COMPLY WITH AS1304. SPLICES IN REINFORCING SHALL COMPLY WITH AS3600.
6. SPLICES IN REINFORCING SHALL COMPLY WITH AS3600. MINIMUM OF 300mm.
7. HAULAGE EYE SHALL BE TO EVOENERGY DRAWING 4951-09.
8. THE 125 DN UPVC CONDUITS SHALL BE LIGHT ORANGE IN COLOUR AND BE MEDIUM DUTY CONDUIT COMPLYING WITH AS2053.2 OR CLASS PN9 SERIES 1 PIPE COMPLYING WITH AS1477. THE NUMBER AND CONFIGURATION OF CONDUITS SHALL BE ADVISED BY EVOENERGY.
9. THE DRAIN PIPE SHALL BE UPVC CLASS SH COMPLYING WITH AS1260. THE POSITION OF THE DRAIN PIPE SHALL BE DETERMINED ON SITE TO THE SATISFACTION OF THE SUPERINTENDENT. IF CONNECTION OF THE DRAIN PIPE TO A STORMWATER SYSTEM IS NOT POSSIBLE A 300 x 300 x 200mm DEEP SUMP SHALL BE CONSTRUCTED IN THE FLOOR OF THE PIT TO ALLOW A PORTABLE PUMP TO EMPTY THE PIT OF ANY WATER.
10. TYPICAL CABLE (240mm^2 Al 3C XLPE) INSTALLATION POSITION SHOWN IN PLAN ONLY. CABLE SUPPORT MAY BE REQUIRED.
11. BELL MOUTHS TO BE INSTALLED INSIDE ALL HOLES TO AVOID DAMAGE TO CABLE.
12. BUILDER IS TO MAINTAIN STABILITY OF WALL DURING BACKFILLING PROCEDURE.
13. BUILDER MAY NOT START BACKFILLING BEHIND WALL UNTIL 7 DAYS MINIMUM AFTER WALL POUR.
14. THIS DRAWING TO BE READ WITH SUPPLIER DETAIL DRAWINGS FOR THE GATIC COVER PARTS AND SUPPORT BEAMS DETAILS TO COORDINATE DIMENSIONS DRAWING NO. CLRC230E447 OR EQUIVALENT FOR LOAD RATING (D) FOR AS3996:2019.
15. DIMENSIONS AS SPECIFIED IN THE DRAWINGS ARE MINIMUM. THESE CAN BE MODIFIED DEPENDING UPON THE TYPE OF PIT COVER BEING USED.
16. THE ACCESS COVER SYSTEM MUST BE OF MULTI-PARTS WITH REMOVABLE BEAMS AND SHALL BE CLASSIFIED AS WATERTIGHT SEALED IN ACCORDANCE WITH AS3996:2019
17. LOAD CLASSIFICATION OF OF THE ACCESS COVER AND GRATE SYSTEM SHALL BE DESIGNED FOR CLASS D LOADS IN ACCORDANCE WITH AS3996:2019 WITH A SERVICEABILITY DESIGN LOAD OF 160kN AND AN ULTIMATE LIMIT STATE DESIGN OF 240kN.
18. THIS PIT IS RATED TO CLASS D AND SUITABLE ONLY AREAS SUCH AS ROAD SHOULDERS, WAREHOUSE AND LOADING DOCKS & VEHICLES WITH NOMINAL WHEEL LOADING UP TO 8000Kg. THIS PIT IS NOT SUITABLE FOR HEAVY VEHICLES THAT EXCEEDS NOMINAL WHEEL LOADING OF 8000Kg AND FOR CARRIAGEWAYS.

WATERSTOPS

- WATERSTOP TO BE 30 CLEAR OF REINFORCEMENT
- FIX WATERSTOPS FIRMLY INTO POSITION BEFORE POURING CONCRETE
- USE FACTORY MADE JUNCTIONS WHERE REQUIRED
- WATERSTOP TO BE INSTALLED IN ACCORDANCE WITH MANUFACTURERS WRITTEN INSTRUCTIONS

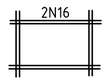

EXTRA RFT AROUND CONDUITS OPENING

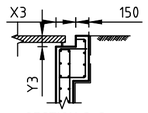

SECTION C-C

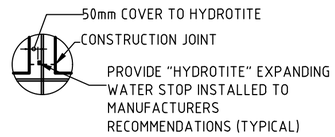

TYPICAL CONSTRUCTION -CJ

No	Revision	Date	Checked	Approved
A	NOTES UPDATE, DIMENSIONS UPDATE - SG	9/06/2021	N. Azizi	W. Cleland
B	COVER RATING AMDED FROM D400 TO D240 & NOTE 18 ADDED - KV	12/04/2022	N. Azizi	W. Cleland

evoenergy

The information contained within this drawing & associated electronic file shall remain the property of Evoenergy and shall not be copied or used for any other purpose without express written permission from Evoenergy. © Evoenergy. 2018.

ACT Cadastral information supplied by the ACT Environment & Sustainable Development Directorate. © ACT Gov. 2018.

Drawn: S. Ghonim | Designed: S. Ghonim
Checked: N. Azizi 21/05/2021
Approved: W. Cleland 21/05/2021
Project No:

TYPICAL CABLE PIT, TYPE D240 LOAD RATING 3 WAY - WITH CABLE JOINTS MULTIPARTS COVER WITH 4 REMOVABLE BEAMS 15 PARTS (3X5)

Scale: 1:50 | Date: 21/05/2021 | Sheet No: 1/1
Work Pack No: | File:
Status: Current
A2 | 394-021 | Rev B

Date Plotted: 8/03/2023 Plot Style: Electrical.ctb